Cambridge International AS & A Level

Cambridge International Examinations
Cambridge International Advanced Subsidiary and Advanced Level

CANDIDATE NAME

CENTRE NUMBER | | | | | |

CANDIDATE NUMBER | | | | |

0067707491

PHYSICS **9702/22**

Paper 2 AS Level Structured Questions **May/June 2018**

1 hour 15 minutes

Candidates answer on the Question Paper.

No Additional Materials are required.

READ THESE INSTRUCTIONS FIRST

Write your Centre number, candidate number and name on all the work you hand in.
Write in dark blue or black pen.
You may use an HB pencil for any diagrams or graphs.
Do not use staples, paper clips, glue or correction fluid.
DO **NOT** WRITE IN ANY BARCODES.

Answer **all** questions.

Electronic calculators may be used.
You may lose marks if you do not show your working or if you do not use appropriate units.

At the end of the examination, fasten all your work securely together.
The number of marks is given in brackets [ ] at the end of each question or part question.

This document consists of **14** printed pages and **2** blank pages.

© UCLES 2018

CAMBRIDGE International Examinations

Data

speed of light in free space	$c = 3.00 \times 10^{8}\,\text{m s}^{-1}$
permeability of free space	$\mu_0 = 4\pi \times 10^{-7}\,\text{H m}^{-1}$
permittivity of free space	$\varepsilon_0 = 8.85 \times 10^{-12}\,\text{F m}^{-1}$
	$(\frac{1}{4\pi\varepsilon_0} = 8.99 \times 10^{9}\,\text{m F}^{-1})$
elementary charge	$e = 1.60 \times 10^{-19}\,\text{C}$
the Planck constant	$h = 6.63 \times 10^{-34}\,\text{J s}$
unified atomic mass unit	$1\,\text{u} = 1.66 \times 10^{-27}\,\text{kg}$
rest mass of electron	$m_e = 9.11 \times 10^{-31}\,\text{kg}$
rest mass of proton	$m_p = 1.67 \times 10^{-27}\,\text{kg}$
molar gas constant	$R = 8.31\,\text{J K}^{-1}\,\text{mol}^{-1}$
the Avogadro constant	$N_A = 6.02 \times 10^{23}\,\text{mol}^{-1}$
the Boltzmann constant	$k = 1.38 \times 10^{-23}\,\text{J K}^{-1}$
gravitational constant	$G = 6.67 \times 10^{-11}\,\text{N m}^2\,\text{kg}^{-2}$
acceleration of free fall	$g = 9.81\,\text{m s}^{-2}$

© UCLES 2018

Formulae

uniformly accelerated motion	$s = ut + \frac{1}{2}at^2$ $v^2 = u^2 + 2as$
work done on/by a gas	$W = p\Delta V$
gravitational potential	$\phi = -\frac{Gm}{r}$
hydrostatic pressure	$p = \rho gh$
pressure of an ideal gas	$p = \frac{1}{3}\frac{Nm}{V}\langle c^2 \rangle$
simple harmonic motion	$a = -\omega^2 x$
velocity of particle in s.h.m.	$v = v_0 \cos \omega t$ $v = \pm \omega \sqrt{(x_0^2 - x^2)}$
Doppler effect	$f_o = \frac{f_s v}{v \pm v_s}$
electric potential	$V = \frac{Q}{4\pi\varepsilon_0 r}$
capacitors in series	$1/C = 1/C_1 + 1/C_2 + \ldots$
capacitors in parallel	$C = C_1 + C_2 + \ldots$
energy of charged capacitor	$W = \frac{1}{2}QV$
electric current	$I = Anvq$
resistors in series	$R = R_1 + R_2 + \ldots$
resistors in parallel	$1/R = 1/R_1 + 1/R_2 + \ldots$
Hall voltage	$V_H = \frac{BI}{ntq}$
alternating current/voltage	$x = x_0 \sin \omega t$
radioactive decay	$x = x_0 \exp(-\lambda t)$
decay constant	$\lambda = \frac{0.693}{t_{\frac{1}{2}}}$

© UCLES 2018

[Turn over

Answer **all** the questions in the spaces provided.

1 **(a)** Define *force*.

.....[1]

(b) State the SI base units of force.

.....[1]

(c) The force F between two point charges is given by

$$F = \frac{Q_1 Q_2}{4\pi r^2 \varepsilon}$$

where Q_1 and Q_2 are the charges,
r is the distance between the charges,
ε is a constant that depends on the medium between the charges.

Use the above expression to determine the base units of ε.

base units .....[2]

[Total: 4]

© UCLES 2018

2 **(a)** State the principle of conservation of momentum.

.....

.....

.....[2]

(b) A stationary firework explodes into three different fragments that move in a horizontal plane, as illustrated in Fig. 2.1.

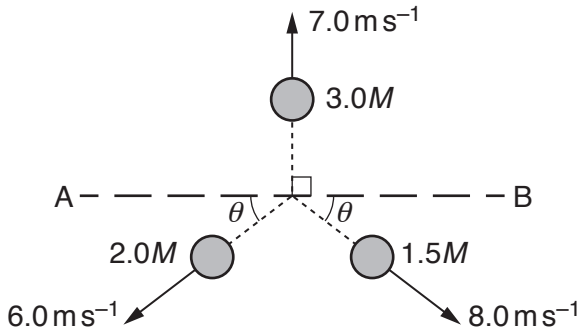

Fig. 2.1

The fragment of mass $3.0M$ has a velocity of $7.0\,m\,s^{-1}$ perpendicular to line AB.
The fragment of mass $2.0M$ has a velocity of $6.0\,m\,s^{-1}$ at angle θ to line AB.
The fragment of mass $1.5M$ has a velocity of $8.0\,m\,s^{-1}$ at angle θ to line AB.

(i) Use the principle of conservation of momentum to determine θ.

θ = ... ° [3]

(ii) Calculate the ratio

$$\frac{\text{kinetic energy of fragment of mass } 2.0M}{\text{kinetic energy of fragment of mass } 1.5M}.$$

ratio = ...[2]

[Total: 7]

3 A child on a sledge slides down a steep hill and then travels in a straight line up an ice-covered slope, as illustrated in Fig. 3.1.

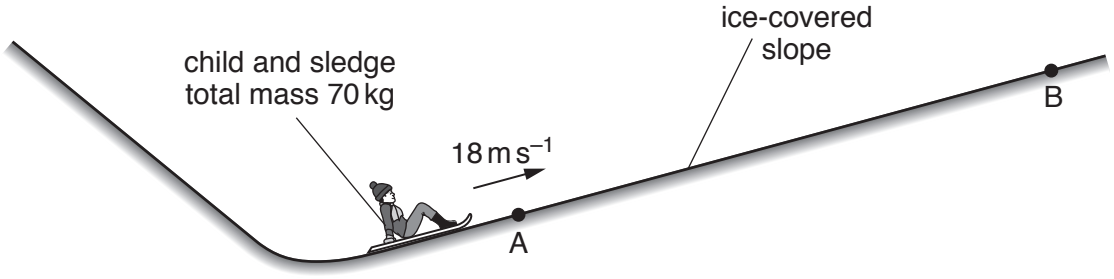

Fig. 3.1 (not to scale)

The sledge passes point A with speed 18 m s^{-1} at time $t = 0$ and then comes to rest at point B. The child applies a brake to the sledge at point B. The brake does not keep the sledge stationary and it immediately slides back down the slope towards A.

The variation with time t of the velocity v of the sledge from $t = 0$ to $t = 24$ s is shown in Fig. 3.2.

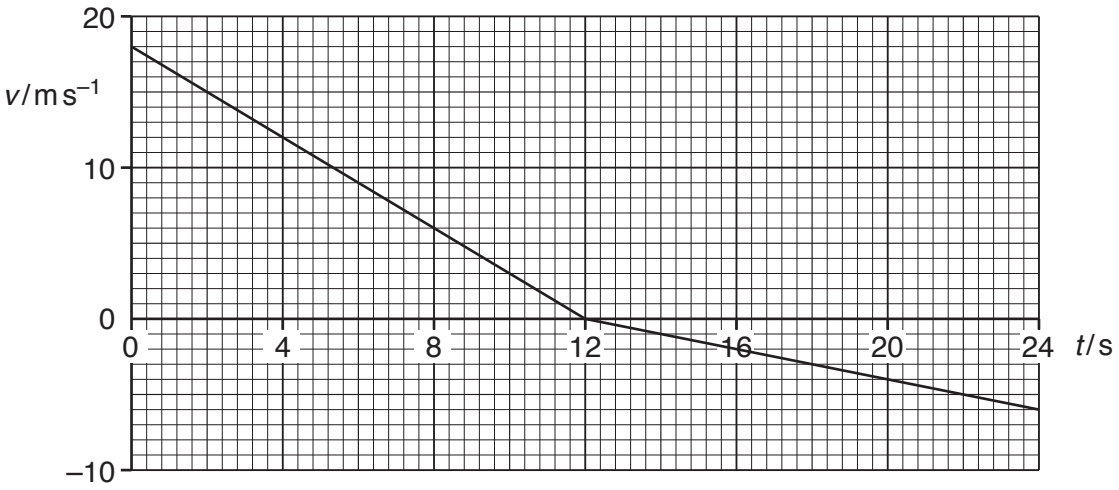

Fig. 3.2

(a) State the time taken for the sledge to travel from A to B.

time = ... s [1]

© UCLES 2018

(b) Determine the displacement of the sledge up the slope from point A at time $t = 24$ s.

displacement = ...m [3]

(c) Show that the acceleration of the sledge as it moves from B back towards A is $0.50\,m\,s^{-2}$.

[2]

(d) The child and sledge have a total mass of 70 kg. The component of the total weight of the child and sledge that acts down the slope is 80 N.

Determine

(i) the frictional force on the sledge as it moves from B towards A,

frictional force = ... N [2]

(ii) the angle θ of the slope to the horizontal.

θ = ... ° [2]

(e) The child on the sledge blows a whistle between $t = 4.0\,s$ and $t = 8.0\,s$. The whistle emits sound of frequency 900 Hz. The speed of the sound in the air is $340\,m\,s^{-1}$. A man standing at point A hears the sound.

Use Fig. 3.2 to

(i) determine the initial frequency of the sound heard by the man,

initial frequency = ... Hz [2]

(ii) describe and explain qualitatively the variation, if any, in the frequency of the sound heard by the man.

.....

.....[1]

[Total: 13]

© UCLES 2018

4 (a) (i) Define the *wavelength* of a progressive wave.

.....

.....[1]

(ii) State what is meant by an *antinode* of a stationary wave.

.....

.....[1]

(b) A loudspeaker producing sound of constant frequency is placed near the open end of a pipe, as shown in Fig. 4.1.

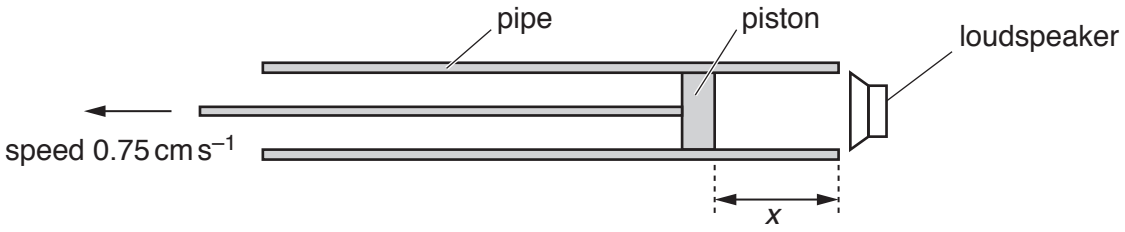

Fig. 4.1

A movable piston is at distance x from the open end of the pipe. Distance x is increased from $x = 0$ by moving the piston to the left with a constant speed of 0.75 cm s^{-1}.

The speed of the sound in the pipe is 340 m s^{-1}.

(i) A much louder sound is first heard when $x = 4.5$ cm. Assume that there is an antinode of a stationary wave at the open end of the pipe.

Determine the frequency of the sound in the pipe.

frequency = ... Hz [3]

(ii) After a time interval, a second much louder sound is heard. Calculate the time interval between the first louder sound and the second louder sound being heard.

time interval = ... s [2]

[Total: 7]

© UCLES 2018

5 A solid cylinder is lifted out of oil by a wire attached to a motor. Fig. 5.1 shows two different positions X and Y of the cylinder during the lifting process.

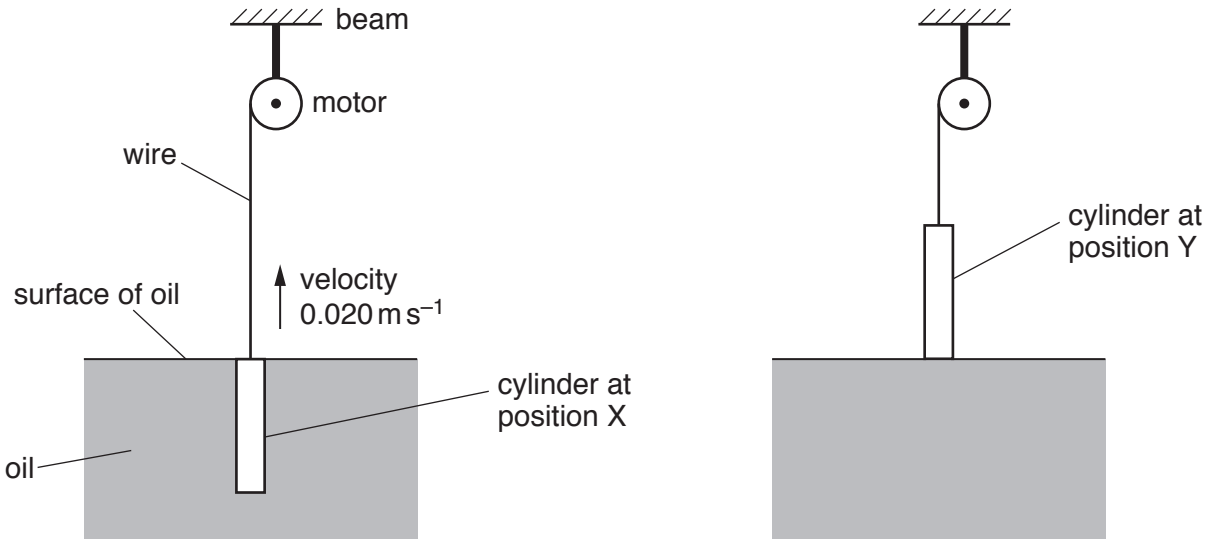

Fig. 5.1

The motor is fixed to an overhead beam.
The cylinder has cross-sectional area $0.018\,m^2$, length 1.2 m and weight 560 N.
The density of the oil is $940\,kg\,m^{-3}$.

Throughout the lifting process, the cylinder moves vertically upwards with a constant velocity of $0.020\,m\,s^{-1}$. The viscous force of the oil acting on the cylinder is negligible.

(a) Calculate the density of the cylinder.

density = ... $kg\,m^{-3}$ [2]

(b) For the cylinder at position X, show that the upthrust due to the oil is 200 N.

[2]

(c) Calculate, for the moving cylinder at position X,

(i) the tension in the wire,

tension = ... N [1]

(ii) the power output of the motor.

power = ... W [2]

(d) The cylinder is raised with constant velocity from position X to position Y.

(i) State and explain the variation, if any, of the power output of the motor as the cylinder is raised. Numerical values are not required.

.....

.....

.....

.....

.....[3]

(ii) The rate of energy output of the motor is less than the rate of increase of gravitational potential energy of the cylinder. Without calculation, explain this difference.

.....

.....[1]

[Total: 11]

© UCLES 2018

[Turn over

6 **(a)** **(i)** State Kirchhoff's first law.

.....

.....[1]

(ii) Kirchhoff's first law is linked to the conservation of a certain quantity. State this quantity.

.....[1]

(b) A battery of electromotive force (e.m.f.) 8.0 V and internal resistance 2.0 Ω is connected to a resistor X and a wire Y, as shown in Fig. 6.1.

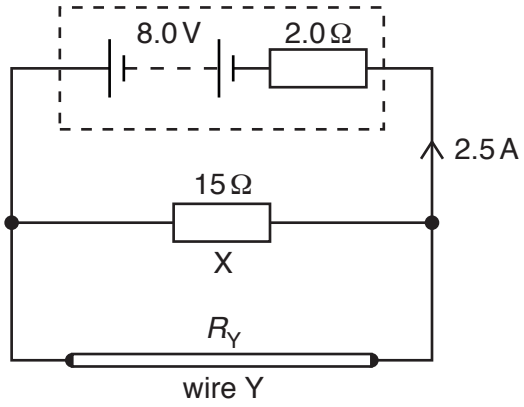

Fig. 6.1

The resistance of X is 15 Ω. The resistance of Y is R_Y. The current in the battery is 2.5 A.

(i) Calculate

1. the thermal energy dissipated in the battery in a time of 5.0 minutes,

energy = ...J [2]

2. the terminal potential difference of the battery.

terminal potential difference = ... V [1]

© UCLES 2018

(ii) Determine the resistance R_Y.

R_Y = ...Ω [3]

(iii) A new wire Z has the same length but less resistance than wire Y.

1. State two possible differences between wire Z and wire Y that would separately cause wire Z to have less resistance than wire Y.

first difference: .....

.....

second difference: .....

.....
[2]

2. Wire Y is replaced in the circuit by wire Z. By considering the current in the battery, state and explain the effect of changing the wires on the total power produced by the battery.

.....

.....

.....[2]

[Total: 12]

© UCLES 2018

[Turn over

7 A stationary nucleus X decays to form nucleus Y, as shown by the equation

$$X \longrightarrow Y + \beta^- + \bar{\nu}.$$

(a) In the above equation, draw a circle around all symbols that represent a lepton. [1]

(b) State the name of the particle represented by the symbol $\bar{\nu}$.

.....[1]

(c) Energy is released during the decay process. State the form of the energy that is gained by nucleus Y.

.....[1]

(d) By comparing the compositions of X and Y, state and explain whether they are isotopes.

.....

.....

.....[2]

(e) The quark composition of one nucleon in X is changed during the emission of a β^- particle. Describe this change to the quark composition.

.....

.....[1]

[Total: 6]

© UCLES 2018

BLANK PAGE

© UCLES 2018

BLANK PAGE

Permission to reproduce items where third-party owned material protected by copyright is included has been sought and cleared where possible. Every reasonable effort has been made by the publisher (UCLES) to trace copyright holders, but if any items requiring clearance have unwittingly been included, the publisher will be pleased to make amends at the earliest possible opportunity.

To avoid the issue of disclosure of answer-related information to candidates, all copyright acknowledgements are reproduced online in the Cambridge International Examinations Copyright Acknowledgements Booklet. This is produced for each series of examinations and is freely available to download at www.cie.org.uk after the live examination series.

Cambridge International Examinations is part of the Cambridge Assessment Group. Cambridge Assessment is the brand name of University of Cambridge Local Examinations Syndicate (UCLES), which is itself a department of the University of Cambridge.

© UCLES 2018